Technical data sheet TRF230

Rotary actuator with emergency control function for ball valves

- **Nominal torque 2 Nm**
- **Nominal voltage AC 230 V**
- **Control Open-close**
- **Deenergised closed (NC)**

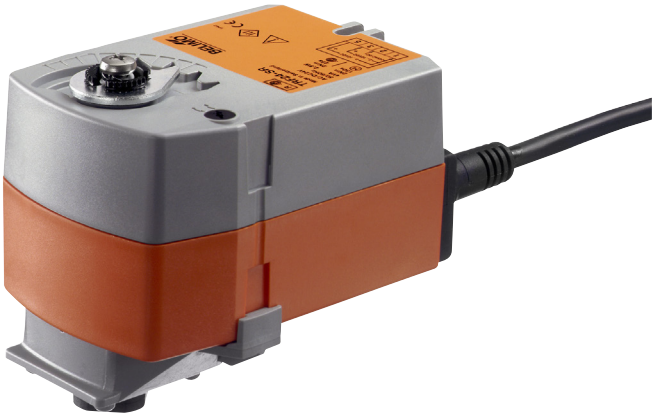

Technical data

Electrical data	Nominal voltage	AC 230 V
	Nominal voltage frequency	50/60 Hz
	Nominal voltage range	AC 85...265 V
	Power consumption in operation	2.5 W
	Power consumption in rest position	1.5 W
	Power consumption for wire sizing	5 VA
	Connection supply / control	Cable 1 m, 2 x 0.75 mm²
	Parallel operation	Yes (note the performance data)
Functional data	Torque motor	Min. 2 Nm
	Torque spring return	Min. 2 Nm
	Direction of rotation spring-return	Deenergised NC, valve closed (A - AB = 0%)
	Manual override	No
	Angle of rotation	95°
	Running time motor	75 s / 90°
	Running time emergency setting position	<75 s / 90°
	Sound power level motor max.	50 dB(A)
	Position indication	Mechanical
	Service life	Min. 60,000 emergency positions
Safety	Protection class IEC/EN	II Protective insulated
	Degree of protection IEC/EN	IP42
	EMC	CE according to 2004/108/EC
	Low voltage directive	CE according to 2006/95/EC
	Certification IEC/EN	IEC/EN 60730-1 and IEC/EN 60730-2-14
	Mode of operation	Type 1
	Rated impulse voltage supply / control	2.5 kV
	Control pollution degree	3
	Ambient temperature	-30...50°C
	Non-operating temperature	-40...80°C
	Ambient humidity	95% r.h., non-condensing
	Maintenance	Maintenance-free
Weight	Weight approx.	0.57 kg

Safety notes

- This device has been designed for use in stationary heating, ventilation and air conditioning systems and is not allowed to be used outside the specified field of application, especially in aircraft or in any other airborne means of transport.
- Caution: Power supply voltage!
- Only authorised specialists may carry out installation. All applicable legal or institutional installation regulations must be complied during installation.
- The device may only be opened at the manufacturer‘s site. It does not contain any parts that can be replaced or repaired by the user.
- Cables must not be removed from the device.
- The device contains electrical and electronic components and is not allowed to be disposed of as household refuse. All locally valid regulations and requirements must be observed.

Product features

Mode of operation
The actuator moves the valve to the operating position at the same time as tensioning the return spring. The valve is turned back to the emergency position by spring force when the supply voltage is interrupted.

Direct mounting
Simple direct mounting on the ball valve with only one screw. The mounting orientation in relation to the ball valve can be selected in 90° steps.

High functional reliability
The actuator is overload protected, requires no limit switches and automatically stops when the end stop is reached.

Electrical installation

Notes

- Caution: Power supply voltage!
- Parallel connection of other actuators possible. Observe the performance data.

Wiring diagrams

AC 230 V, open-close

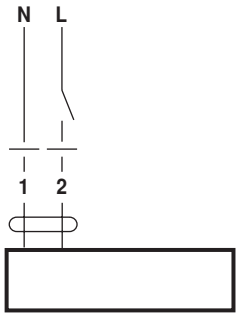

Cable colours:
1 = blue
2 = brown

Dimensions [mm]

Dimensional drawings

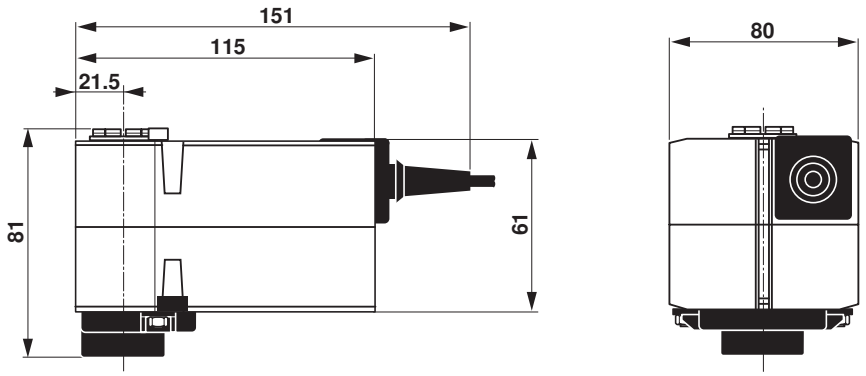

Further documentation

- Overview Valve-actuator combinations
- Data sheets for ball valves
- Installation instructions for actuators and/or ball valves
- General notes for project planning